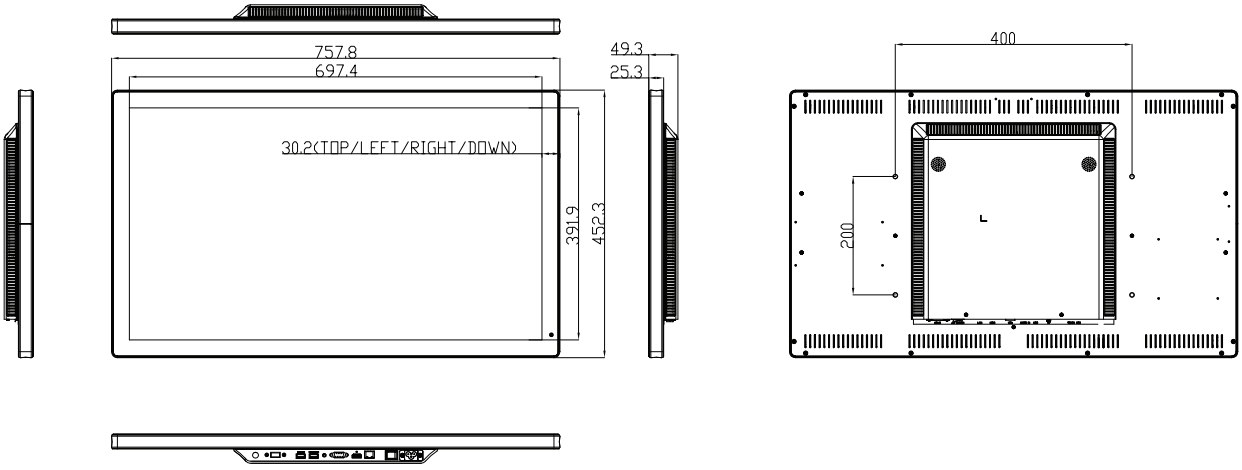
757.8
697.4
49.3
25.3
30.2(TOP/LEFT/RIGHT/DOWN)
391.9
452.3
400
200