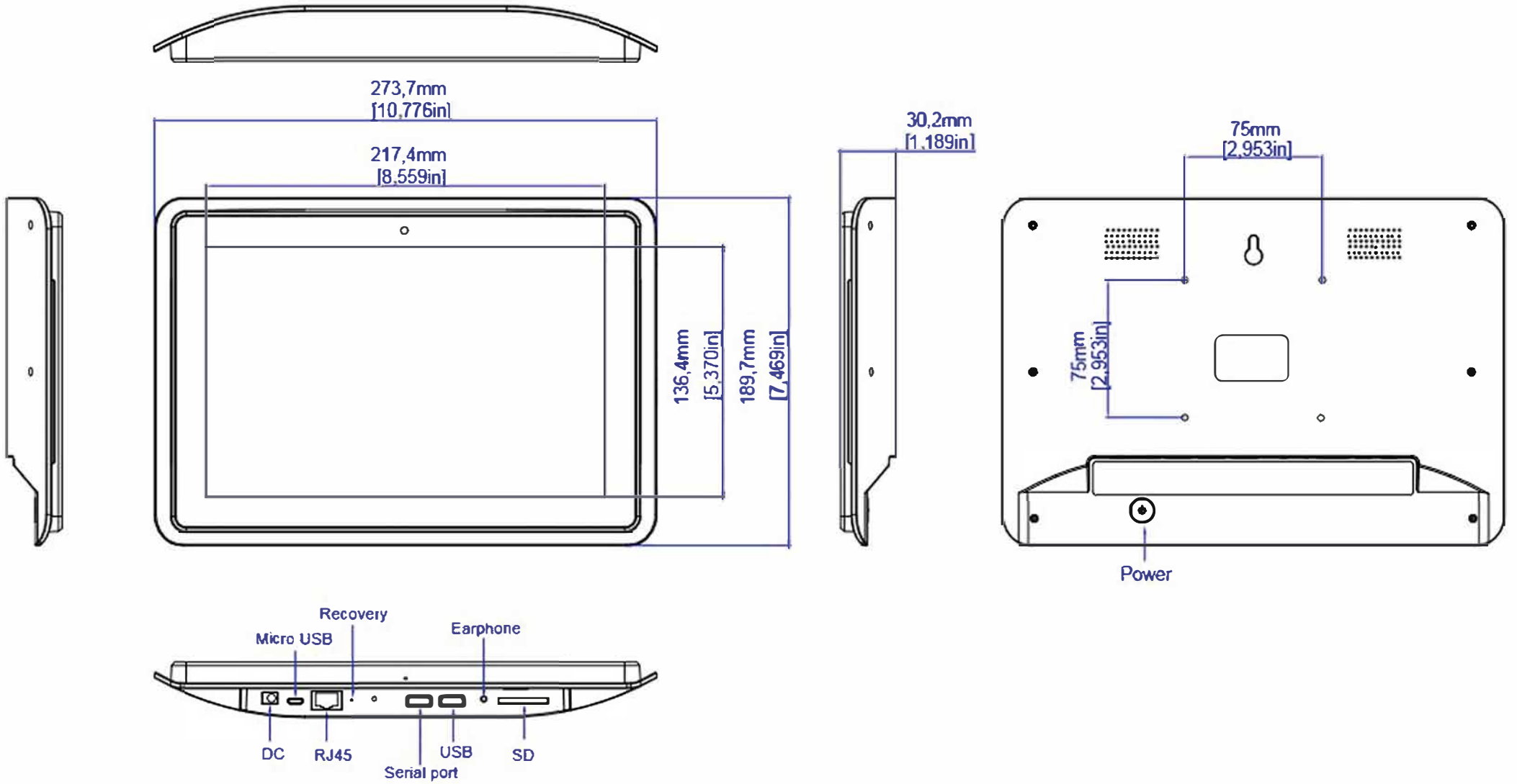

eclipse digital

+44 (0)8450 944954 | hello@eclipsedigitalmedia.co.uk | Eclipse Digital Media, Unit L , Linsford Business Park, Linsford Lane, Mytchett, Surrey, GU16 6DJ